REVISION RECORD				
REV	ECN	DESCRIPTION	DRFT	DATE

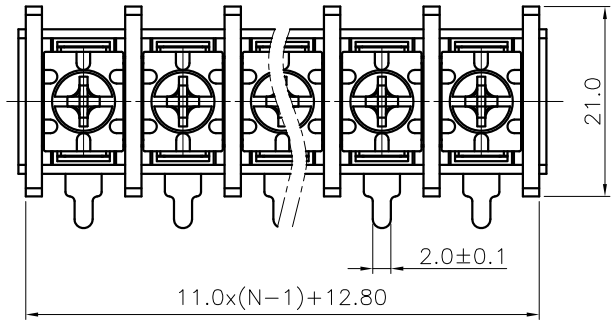

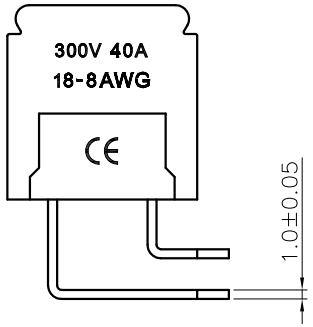

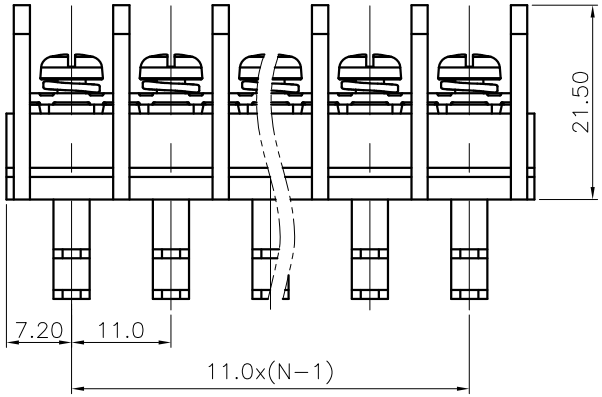

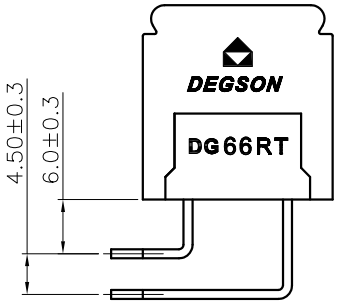

NOTES1:
UL Standard
1.Rated voltage/current : 300V / 40A
2.Torque value : M4 , 15Lb.in
3.Wire range : 18~8AWG

NOTES2:
1.Dimension shall be interpreted per ASME Y14.5-2009
2.Pitch : 11.0mm, Poles : N=02~24P
3.Withstanding voltage : AC1600V/1Min
4.Operating temperature: -40°C~+105°C
5.Undimensioned tolerances:

Pitch range in mm			Nominal dimension range in mm					–	⌒	▱
TO 6	Over 6 TO 10	Over 10 TO 24	TO 30	Over 30 TO 60	Over 60 TO 100	Over 100 TO 150	Over 150	0.1/10		
								∠		
±0.15	±0.20	±0.30	±0.30	±0.50	±0.70	±1.00	±1.30	±2°		

6.RoHS Compliance

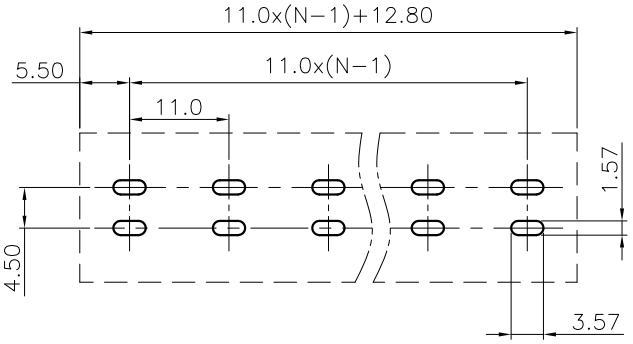

PCB LAYOUT

DG66RT - XXP - 1Y - 00A (H)
(Series No.) (Poles)(Single Pitch) (Color) 00A-(Standard) (RoHS)

(Color):1.(Grey)
2.(Blue)
3.(Black)
4.(Green)
5.(Orange)
6.(Red)
7.(Transparent)
8.(Yellow)
9.(White)

DETACHED LISTS	PART NO.: /	DEGSON® 宁波高松电子有限公司 NINGBO DEGSON ELECTRICAL CO., LTD	
	APPD: /	NAME: DG66RT-XXP-1Y-00A(H)	
	CHKD: /		
	DRFT: /	TITLE: CUSTOMER DRAWING	REV D0
	THIRD ANGLE PROJECTION	DRAWING NO.: /	SHEET 1/1
		MM (INCH) DO NOT SCALE DRAWING	SCALE 1:1